Installation, Operating, and Safety Instructions

KHS® Ball Valve

Figure 389 00

KEMPER

DRIVING PROGRESS

Content

1 Info....3
1.1 Safety warnings & installation instructions....3

2 Product information....5
2.1 Scope....5
2.2 Technical data | Dimensions....5

3 Installation and operation....6
3.1 Installation instructions....6
3.2 Operating instructions....6
3.3 Assembly | Dismantling....7

1 Info

1.1 Safety Warnings & Installation Instructions

READ AND UNDERSTAND THESE WARNINGS AND INSTRUCTIONS FIRST.

Labeling of important warning information:

WARNING indicates a hazardous situation which, if not avoided, could result in death or serious injury.

CAUTION indicates a hazardous situation which, if not avoided, could result in minor or moderate injury.

NOTICE is used to address practices not related to physical injury.

⚠WARNING

Closely review all safety warnings in this manual before installation or use of the valve. Failure to review these safety warnings may lead to injury or property damage!

⚠CAUTION

A trained and qulified plumber must install this product.

⚠CAUTION

All service and repair work should be performed by a trained and qualified plumber using suitable tools and original spare parts.

NOTICE

Check and comply with all applicable federal, state, and local safety and industry codes and standards.

Pass these instructions on to the system operator and retain for later reference!

Carefully inspect the valve before installation for any signs of damage which may have occurred during transportation or storage. Do not use the valve if it seems in any way damaged!

⚠CAUTION

Make sure that the installation location is frost-proof. Perform a leak test after installation and before commissioning the plumbing installation.

⚠CAUTION

Visually check the Flow-Splitter for damages and dirt. Clean it if required.

⚠WARNING

Drinking water approved sealing material must be used for installation of the Flow-Splitter.

⚠CAUTION

The maximum amount of Flow-Splitters in series and the maximum length of the loop pipe depend on the hydraulic and thermal requirements of the installation.

⚠WARNING

During product operation, parts of the product may heat and burn exposed skin.

NOTICE

This product is intended for use in normal working conditions only. The responsibility for correct selection of the valve to the operating conditions, distribution, and installation is borne by the system designer, contractor, and user.

⚠WARNING

Discard all unused parts and packaging material after installation in accordance with federal, state, and local requirements. **Small parts may be a choking hazard!**

Warranty Disclaimer

EXCEPT FOR THE EXPRESS WARRANTIES SET FORTH HEREIN, GEBR. KEMPER GMBH + CO. KG GRANTS NO EXPRESS OR IMPLIED WARRANTIES AND SPECIFICALLY DISCLAIMS ANY OTHER WARRANTIES, WHETHER WRITTEN OR ORAL, INCLUDING ANY WARRANTY OF QUALITY, MERCHANTABILITY, OR FITNESS FOR A PARTICULAR USE OR PURPOSE. GEBR. KEMPER GMBH + CO. KG SHALL NOT BE LIABLE FOR DAMAGES ARISING FROM ANY DISREGARD OF THESE SAFETY WARNINGS & INSTALLATION INSTRUCTIONS, OR ANY DAMAGE CAUSED BY FAULTY INSTALLATION OF THE VALVE, ANY UNAUTHORIZED PRODUCT MODIFICATIONS, OR ANY INCORRECT OPERATION OF THE VALVE.

Fig. 389 00

2 Product information

2.1 Scope

The KHS Ball Valve Figure 389 00 is suitable for use as stop valve in plumbing installations.

2.2 Technical data | Dimensions

Technical data	
Area of application	For isolation of pipes in plubing installations.
Max. operating temperature	90 °C / 194 °F
Rated pressure	PN 16
Sizes	DN 15, DN 20, DN 25 | 1/2", 3/4", 1"
Connecting version	Female pipe thread (FNPT)

Part no.	A1	D1 in	H1 in	H2 in	L1 in	T1 in	weight lbs.
3890001500	FPT 1/2	3.5	2.2	1.0	3.3	0.6	0.23
3890002000	FPT 3/4	3.5	2.2	1.0	3.5	0.6	0.27
3890002500	FPT 1	3.5	2.3	1.1	3.9	0.7	0.38

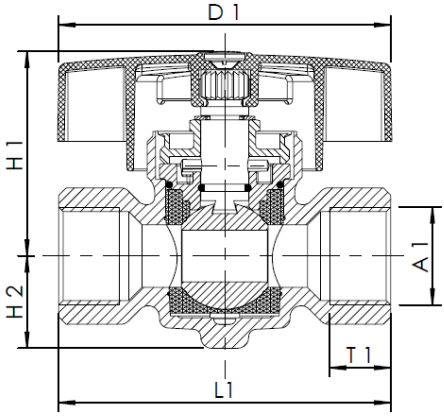

3 Installation and operation

3.1 Installation instructions

⚠CAUTION

The KHS Ball Valve shall be installed in flow direction of the valve, which is indicated on the valve.

⚠CAUTION

Only drinking water approved sealant must be used to connect the valve to the pipework.

3.2 Operating instructions

The valve is opened and closed by turning 90° to the left or right. The valve should be operated slowly in order to avoid pressure surges.

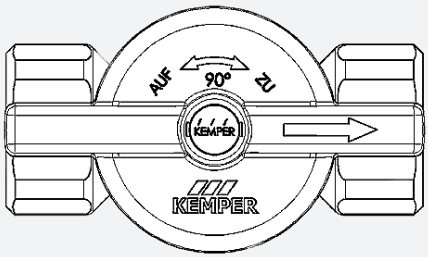

open

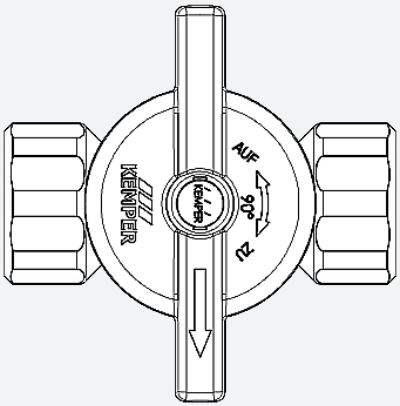

close

3.3 Assembly | Dismantling

Replace the valve isert

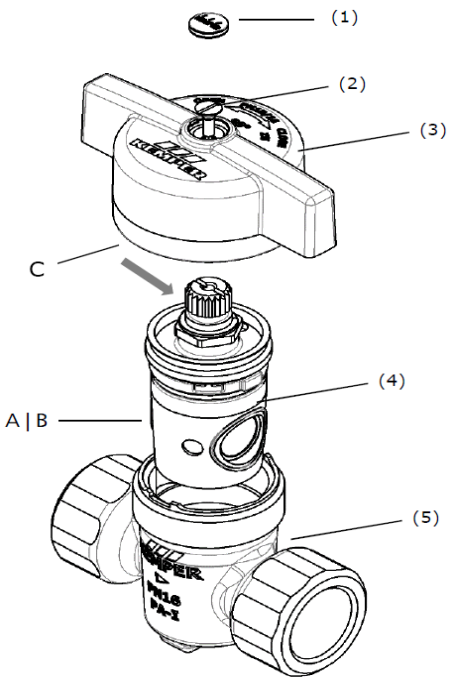

Dismantling

Remove the cover (1) using a screwdriver and remove the screw (2).
Take the handle off the valve (3) and use a spanner to unscrew the valve insert (4).

Assembly

Insert the valve plug (4) into the housing (5) and push against the stop.
Fasten the valve insert with a torque of 20 Nm.
Fit the operating handle onto the spindle (3). The handle must be placed in the same direction as the groove on the spindle.
Fix the handle with the screw (2) and put the cover back into position.

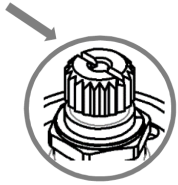

<u>See position of groove:</u>
Fit the operating handle in the same position.

Spare parts list

Pos	Description	Part No.
A	insert DN 15 | 20	E011838900020KP
B	insert DN 25	E011838900025KP
C+(1)+(2)	operating handle with cover (1) and screw (2)	121003890000100

KEMPER
DRIVING PROGRESS

Gebr. Kemper GmbH + Co. KG
Harkortstaße 4
D-57462 Olpe

Service-Hotline +49 2761 891-800
info@kemper-group.com
www.kemper-group.com

K410038900001-00 / 03.2023